EZ Glaze™ | Installation Guide

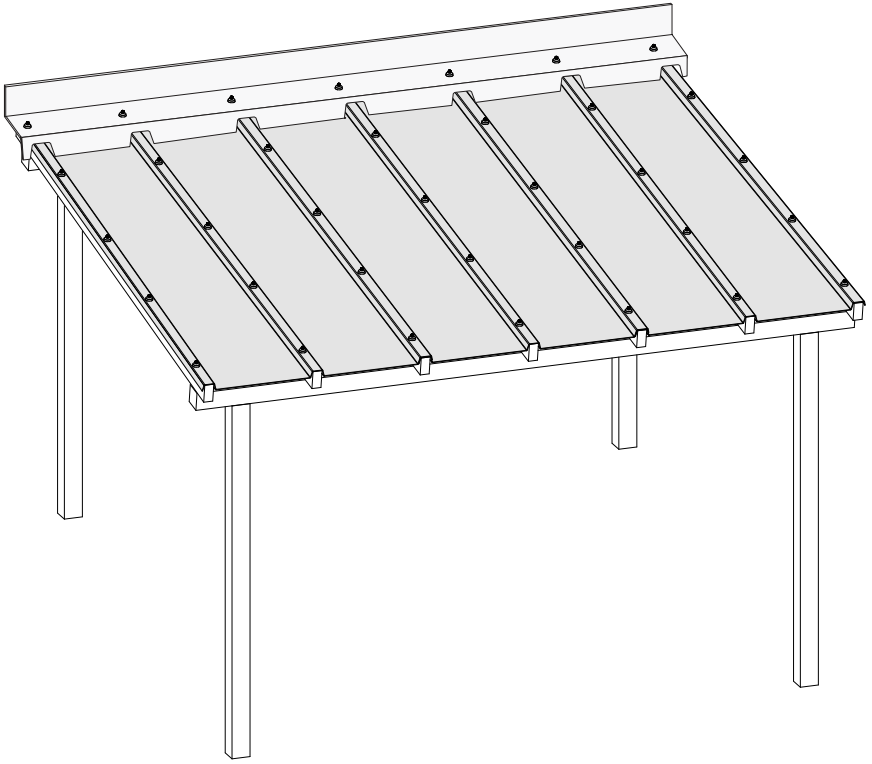

Easy to install | Rafter installation | Glass appearance | Clear & elegant | UV resistance | Premium solution

EZ Glaze™ - Product page | Installation video | PALRAM website

Before Installation

Recommended safety equipment

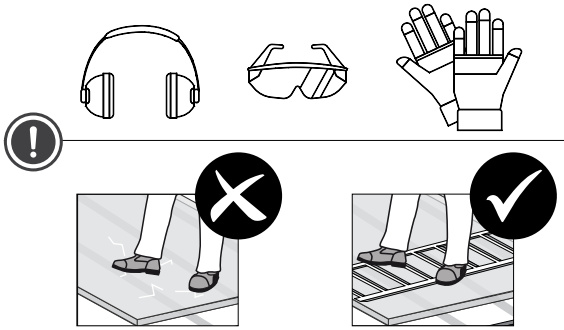

Do not step directly on the sheets between the rafters!
When installing EZ Glaze or doing maintenance work, always use ladders or crawl boards, supported by minimum three roof structural elements.

Required tools

Drill	Ladder	Circular saw	Measuring tape
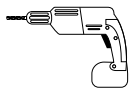			

Accessories

Purlin tape	Butyl sealing tape	Headwall flashing	Neutral Cure Silicone sealant (approved)	Recommended screws with 26mm EPDM washer
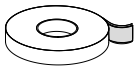	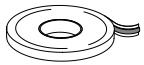		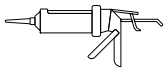	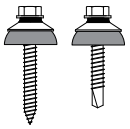

Product information

Thickness	3mm
Cover width	600mm
Total width	673mm
Maximum length	7,000mm
Minimum required pitch	3 degrees

Profile range

Profile	Rafter width	Profile dimension
EZ Glaze 50	40-50mm	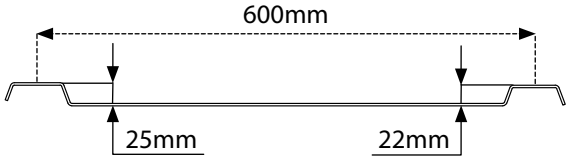

Installation method

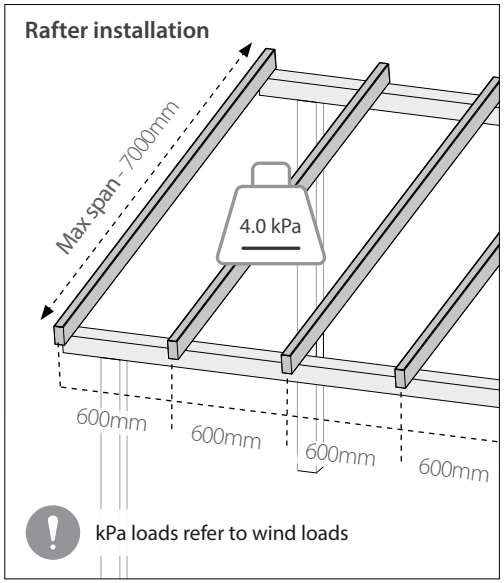

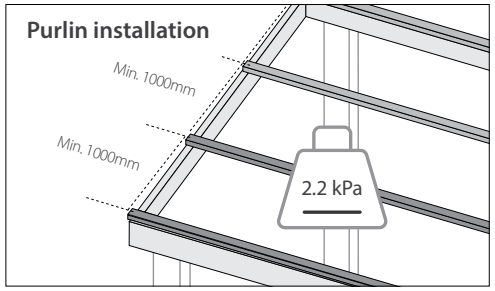

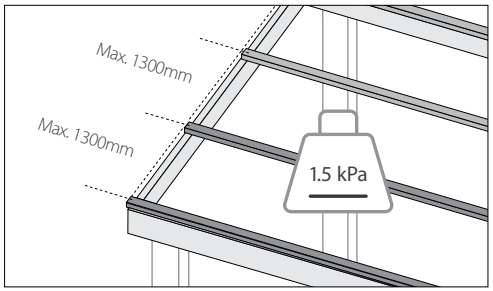

Before Installation

Rafter spacing

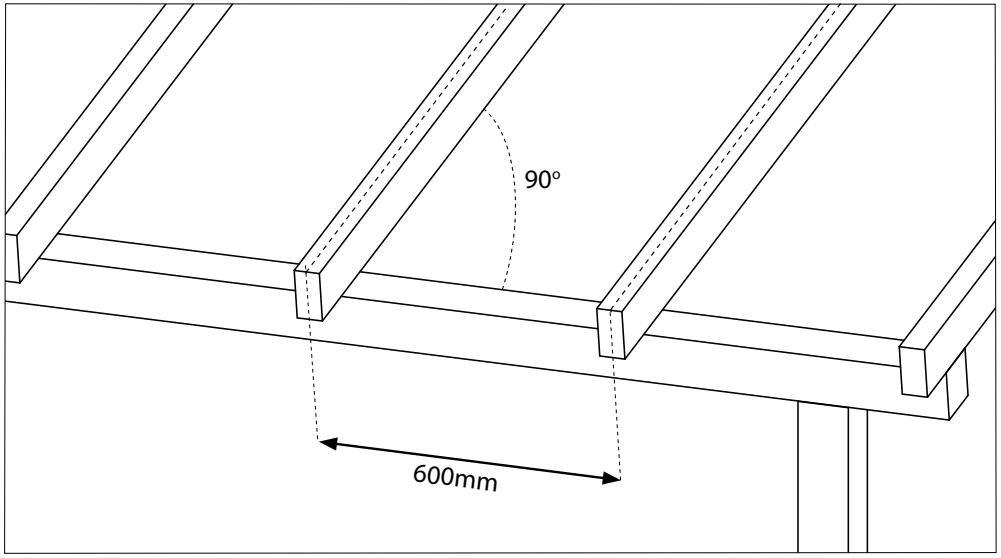

Installation direction recommendation

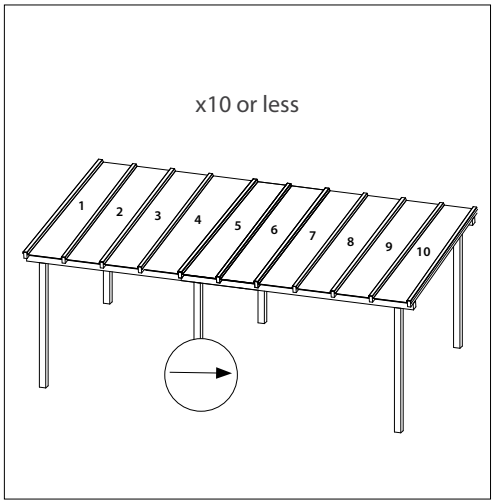

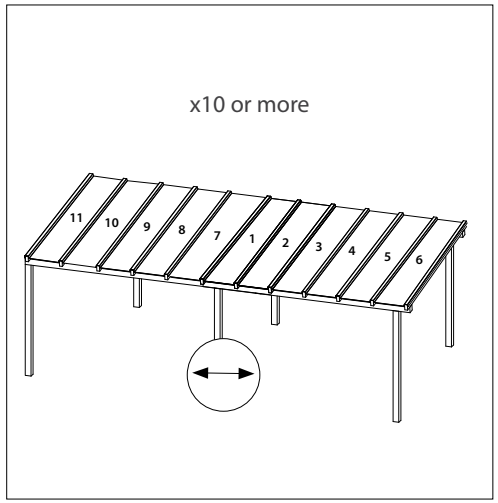

Installation variation and directions

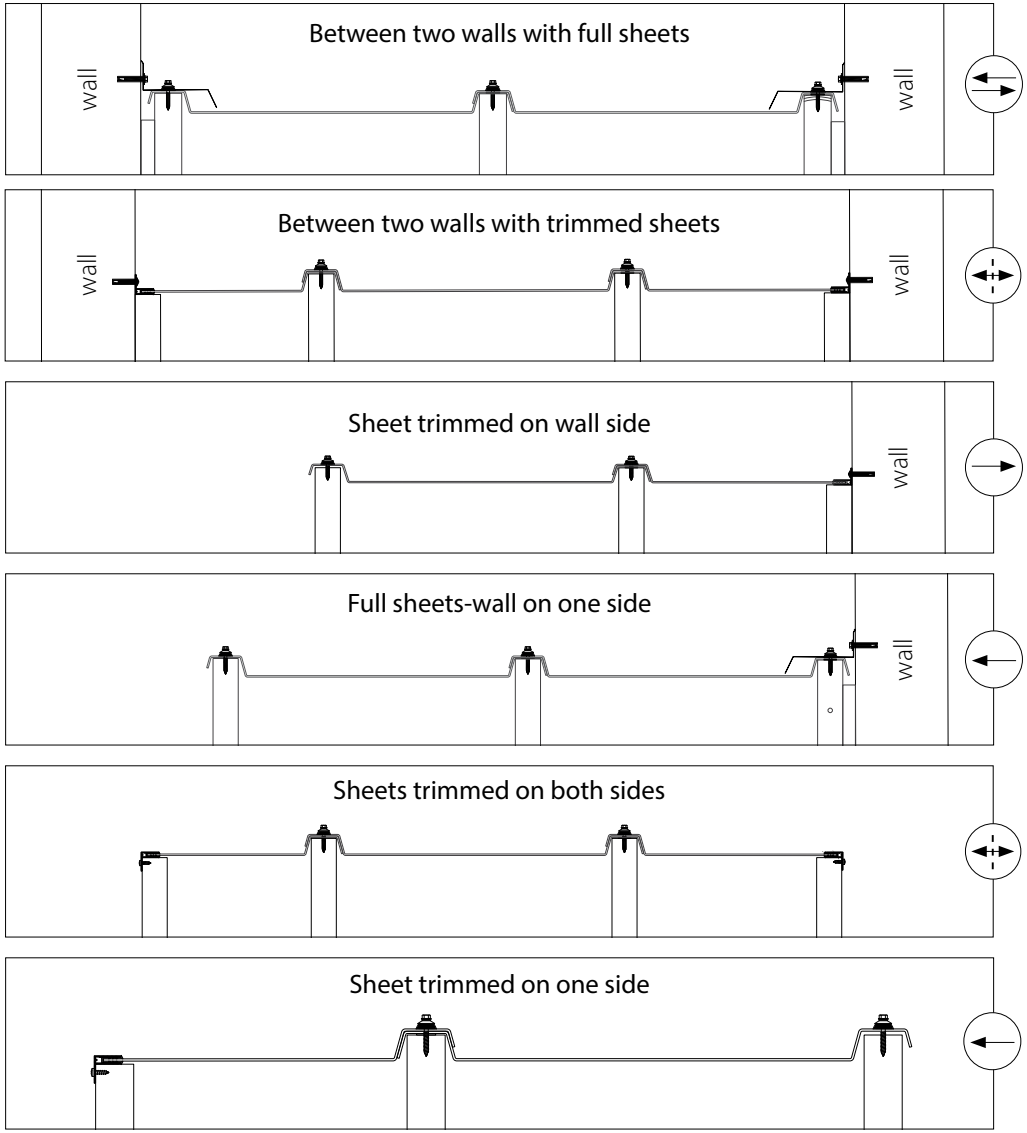

Installation

1 Purlin tape application

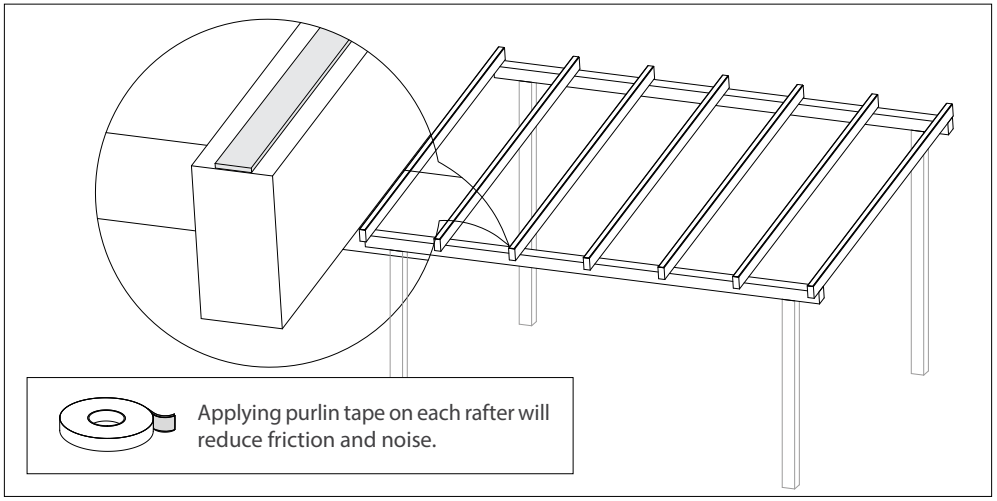

2 Setting the first EZ Glaze panel

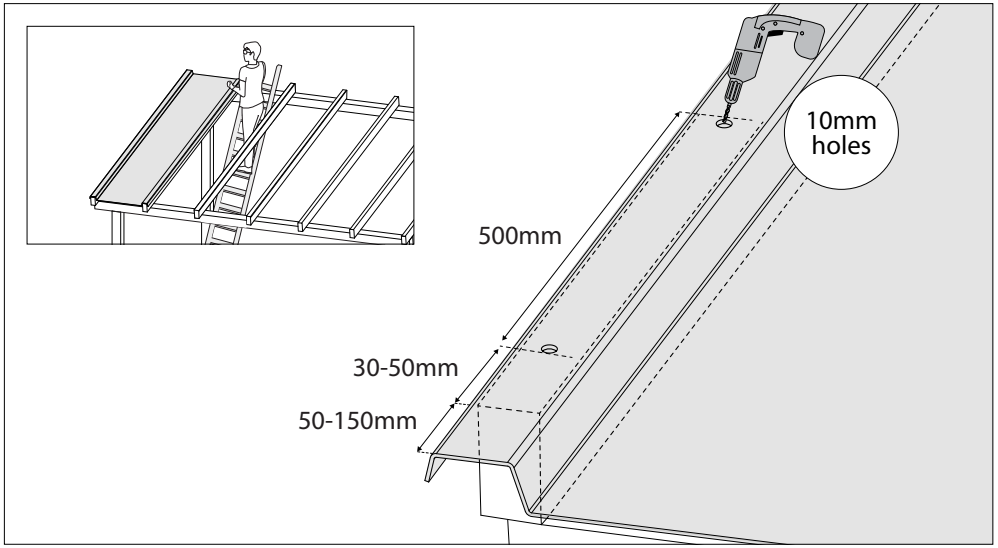

3 Fixing the first EZ Glaze panel

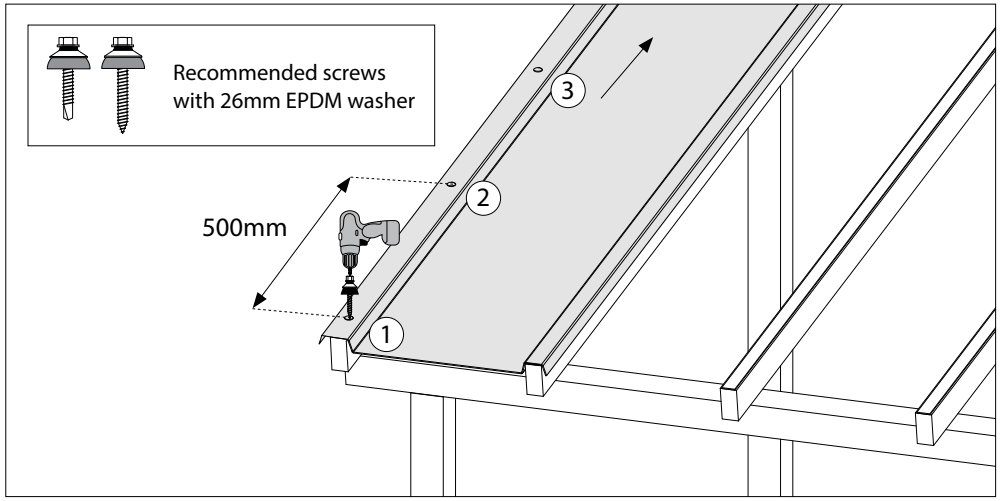

4 Setting the second EZ Glaze panel

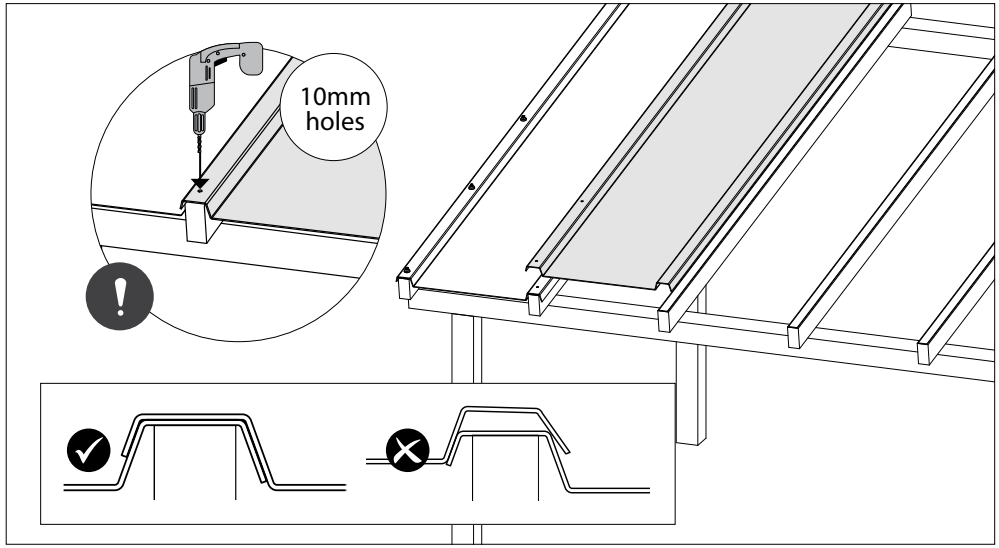

5 Fixing the second EZ Glaze panel

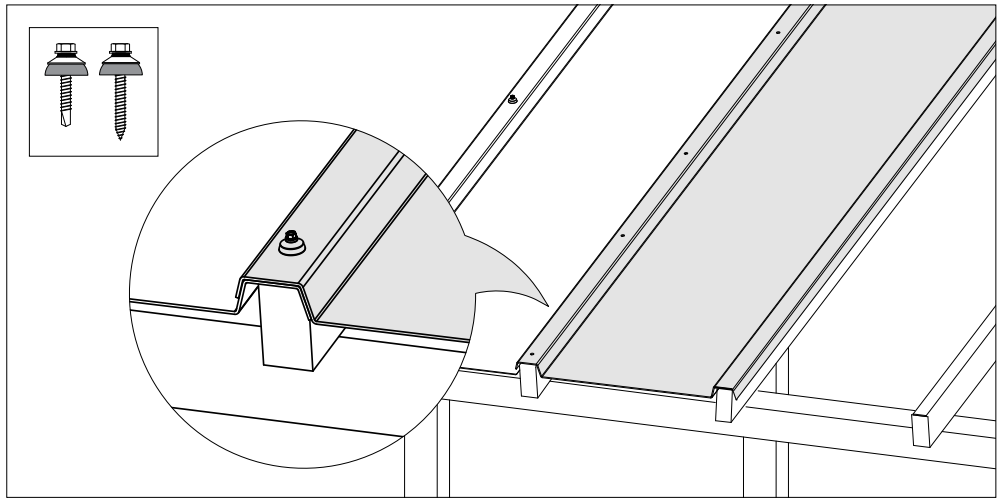

6 Repeat stages 4-5 until the pergola is fully covered

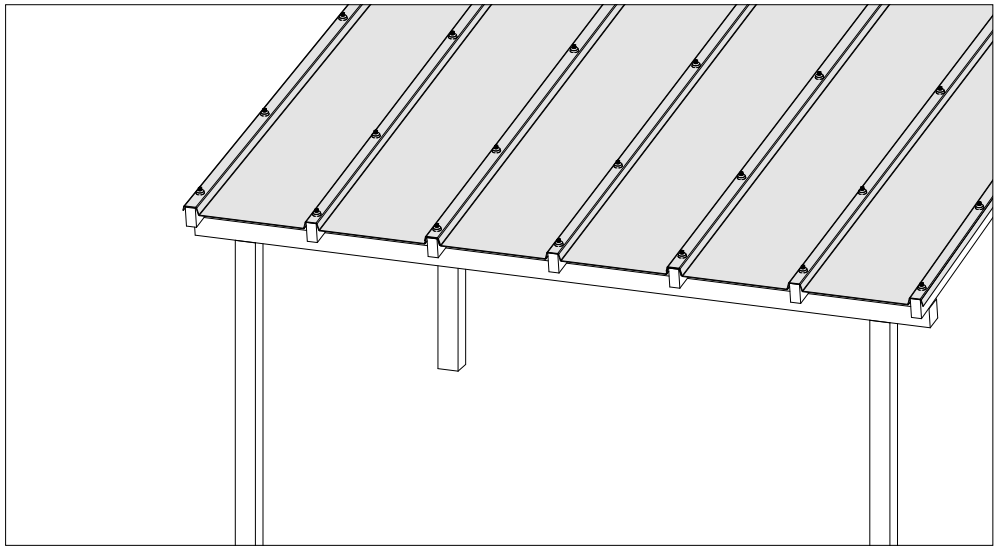

7 Applying butyl tape

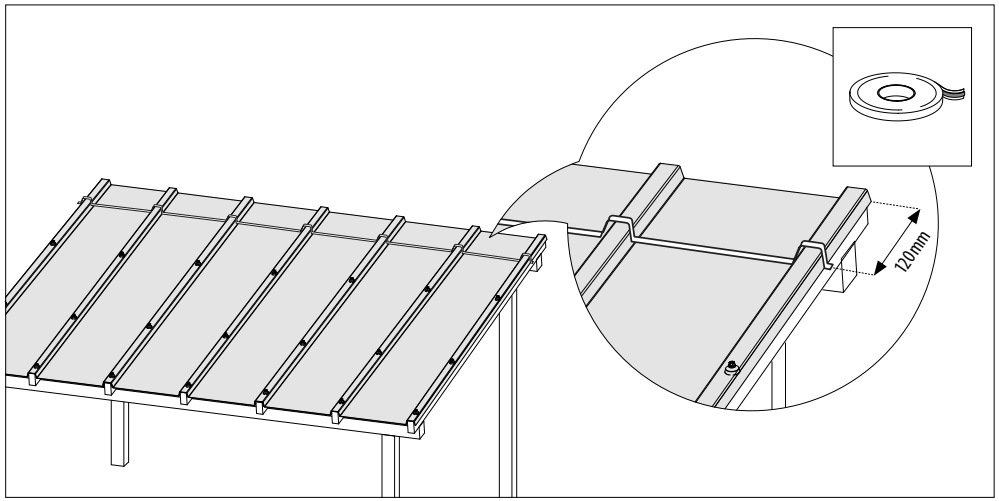

8 Installing head wall flashing (purchased separately)

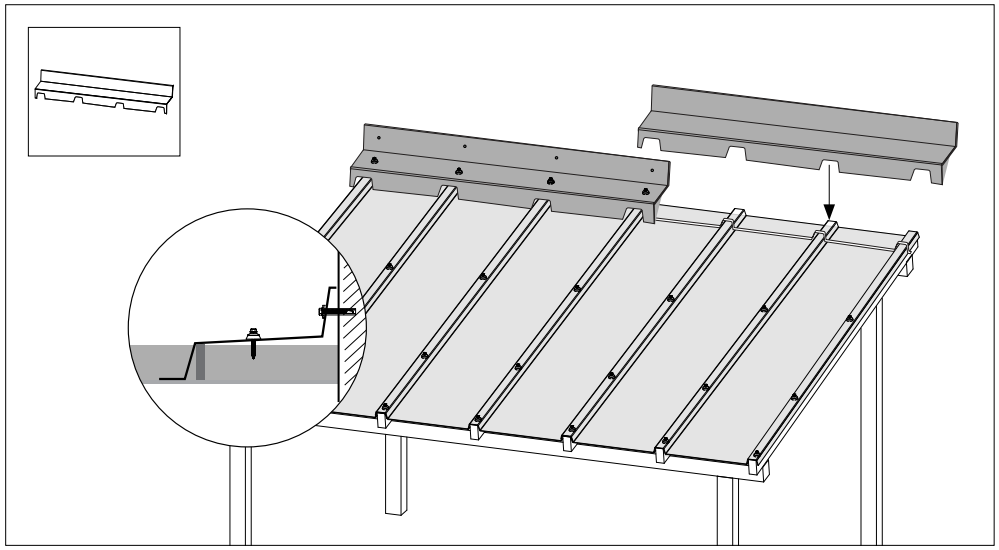

Installation - Finishing Accessories

9 Installing side wall flashing (purchased separately)

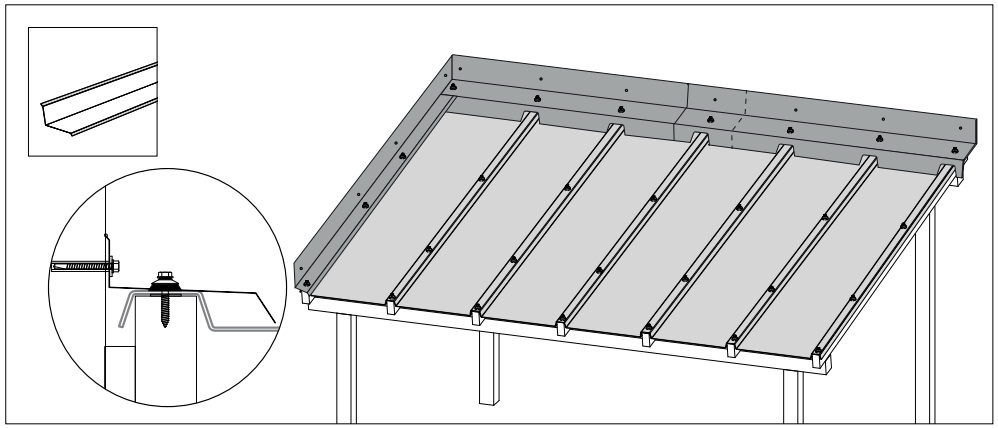

10 Applying silicone (purchased separately)

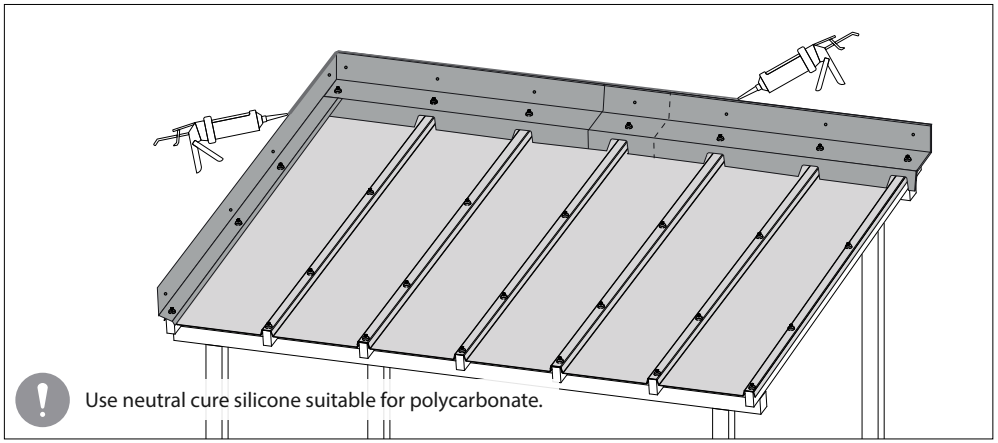

Installation - Finishing

! Side wall finish when the panel is trimmed (purchased separately)

Installation to side wall

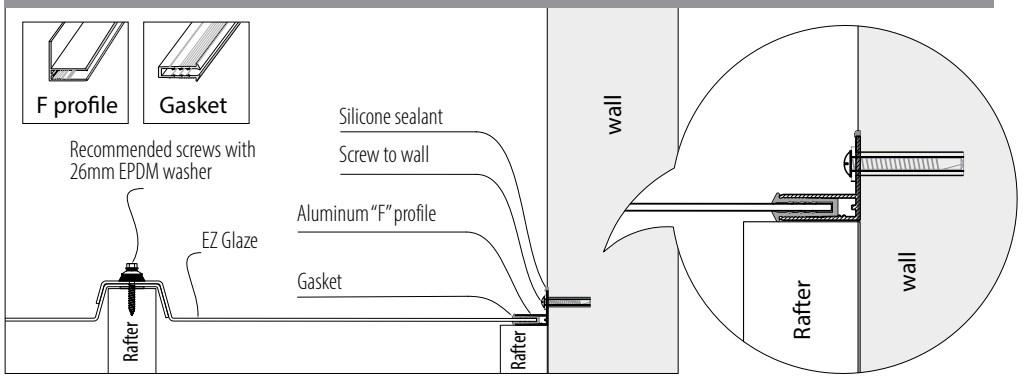

Installation with no side wall

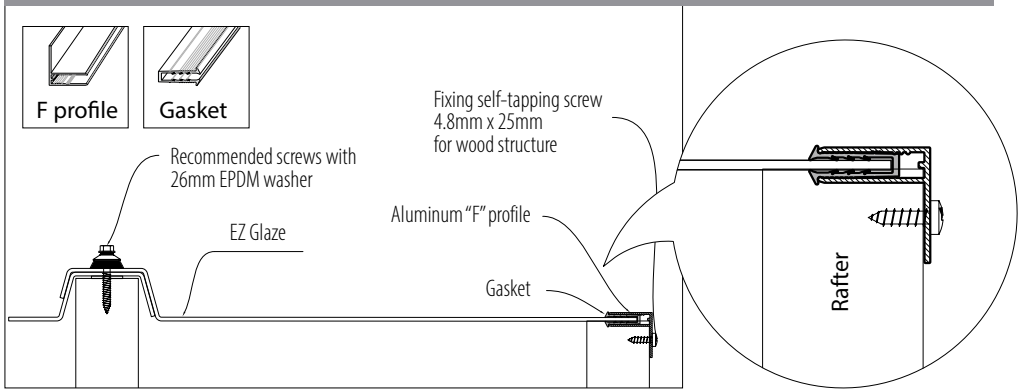

PALRAM

PALRAM SA/NT
517A Cross keys Road
Cavan SA 5094
Tel: (08) 8262 2288
Fax: (08) 8262 3388
salessa@palram.com

PALRAM NSW/ACT
Unit 2, 26 Redfern St,
Wetherill Park, NSW 2764
Tel: (02) 8788 6100
Fax: (02) 8788 6199
salesnsw@palram.com

PALRAM QLD
Unit 9C / 380 Bilsen Road
Geebung QLD 4034
Tel: (07) 3172 5581
Fax: (07) 3172 5516
salesqld@palram.com

PALRAM VIC/TAS
34 Buys Court
Derrimut VIC 3030
Tel: (03) 9219 4444
Fax: (03) 9219 4455
salesvic@palram.com

PALRAM WA
74 Christable Way
Landsdale WA 6065
Tel: (08) 9302 4173
Fax: (08) 9302 5287
saleswa@palram.com

RoHS Compliant Heavy Metal Free

ISO 9001 QUALITY ASSURANCE

Build On.

604344 - 010.2024

Warranties only apply to installations and maintenance that follow Palram installation instructions and specifications.